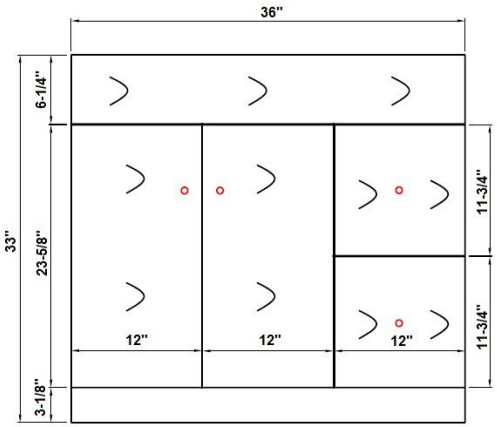
36"
6-1/4"
33"
23-5/8"
11-3/4"
11-3/4"
12"
12"
12"
3-1/8"

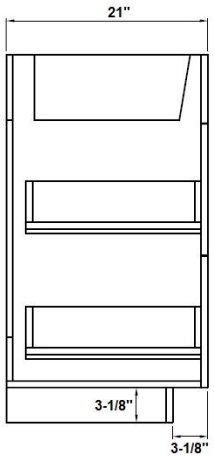
21"
3-1/8"
3-1/8"

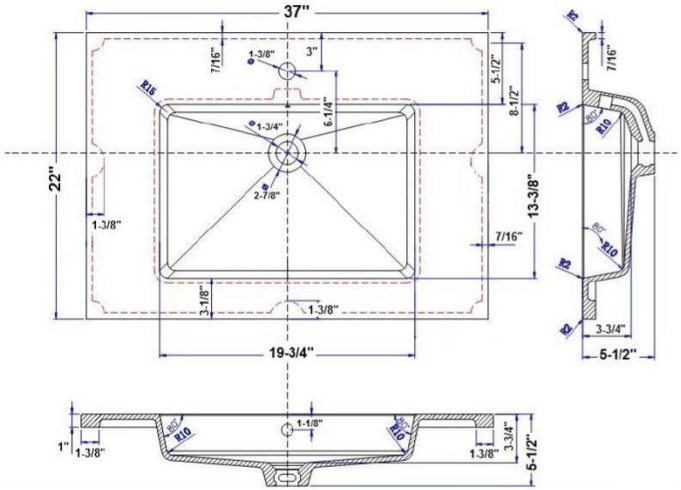
37"
7/16"
1-3/8"
3"
5-1/2"
8-1/2"
R16
6-1/4"
1-3/4"
22"
2-7/8"
13-3/8"
1-3/8"
7/16"
3-1/8"
1-3/8"
19-3/4"
7/16"
R2
R10
R10
R2
R2
3-3/4"
5-1/2"
1-1/8"
1"
1-3/8"
1-3/8"
3-3/4"
5-1/2"

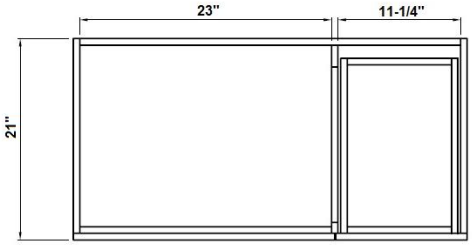
23"
11-1/4"
21"

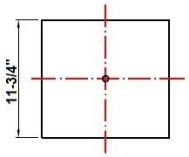
11-3/4"

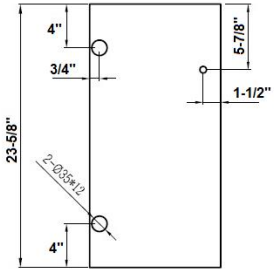
4"
3/4"
5-7/8"
1-1/2"
23-5/8"
2-Ø35x12
4"

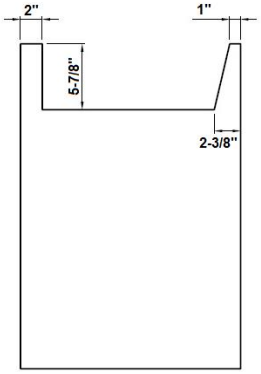
2"
1"
5-7/8"
2-3/8"

ECO 3722 MOD

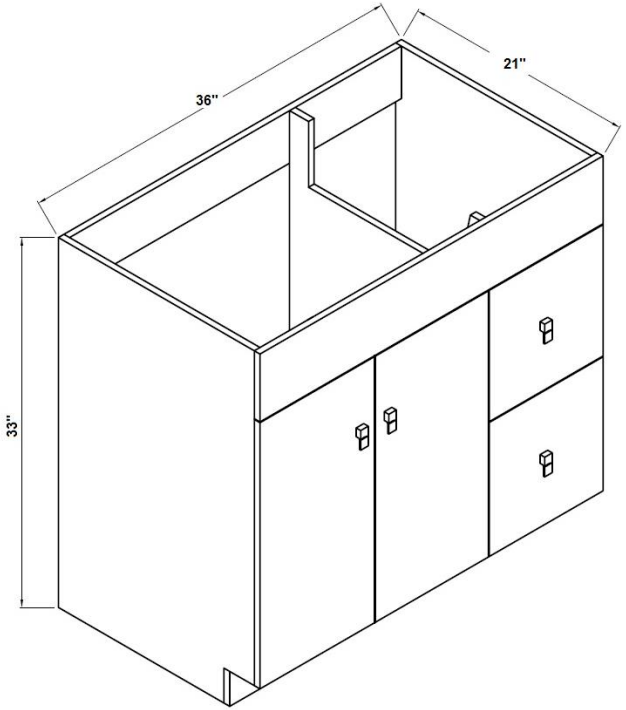
36"
21"
33"